ARMSTRONG®

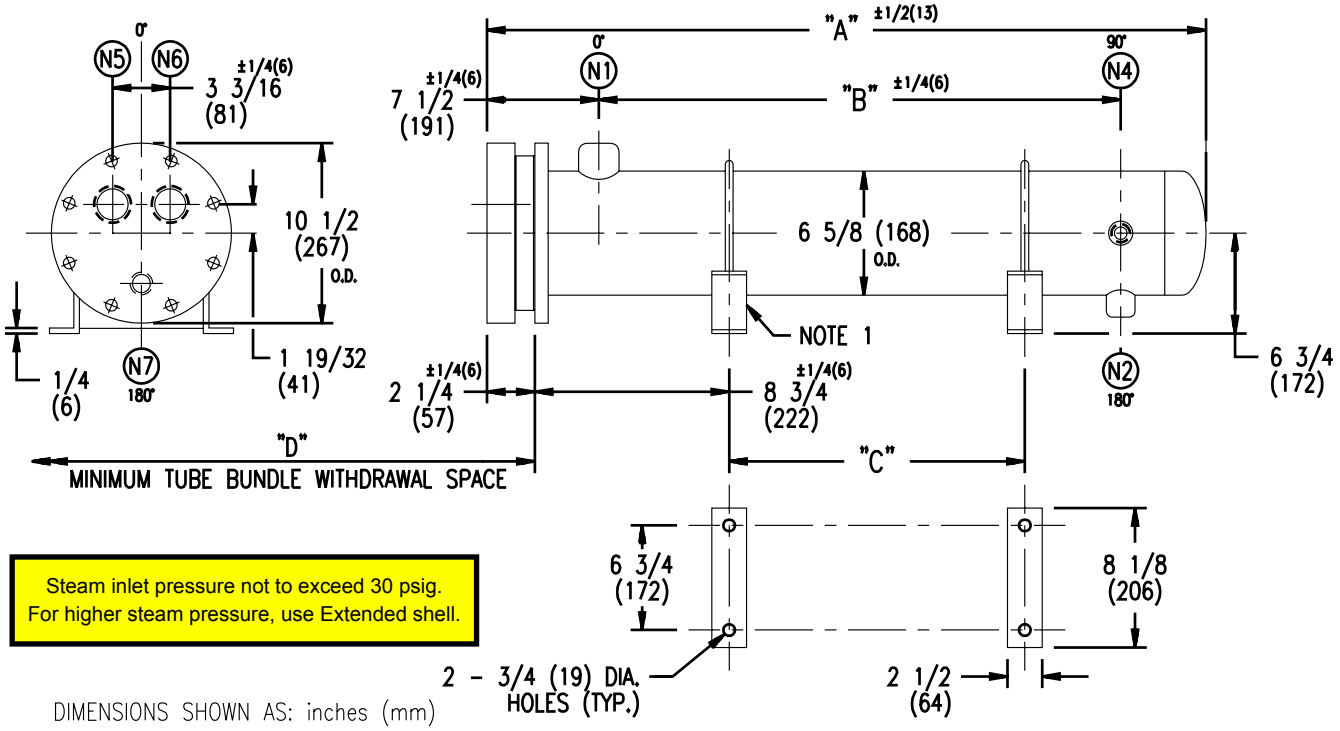

Steam inlet pressure not to exceed 30 psig.
For higher steam pressure, use Extended shell.

DIMENSIONS SHOWN AS: inches (mm)

EXCHANGER SIZE	DIMENSIONS											
	A		B		C		D		N1		N2	
	inches	mm	inches	mm	inches	mm	inches	mm	inches	mm	inches	mm
WS-62-4-3	27 5/8	702	15	381	8	203	25	635	1 1/2	38	1	25
WS-63-4-3	39 5/8	1006	27	686	20	508	37	940	2	51	1	25
WS-64-4-3	51 5/8	1311	39	991	32	813	49	1245	2 1/2	64	1	25
WS-65-4-3	63 5/8	1616	51	1295	44	1118	61	1549	2 1/2	64	1	25
WS-66-4-3	75 5/8	1921	63	1600	56	1422	73	1854	3	76	1	25
WS-67-4-3	87 5/8	2226	75	1905	68	1727	85	2159	3	76	1	25
WS-68-4-3	99 5/8	2530	87	2210	80	2032	97	2464	3	76	1	25

NOZZLE SCHEDULE

SERVICE	MARK	SHELL SIDE	MARK	TUBE SIDE
INLET	N1	AS PER TABLE	N5	1 1/2 (38) NPT
OUTLET	N2	AS PER TABLE	N6	1 1/2 (38) NPT
DRAIN			N7	1/2 (13) NPT
VENT	N4	3/4 (19) NPT		

NOTES:
1. SUPPORTS SUPPLIED ONLY IF SPECIFIED ON ORDER.
2. NOZZLE SIZES SHOWN ARE RECOMMENDED FOR MAXIMUM EXCHANGER LIFE.
3. FABRICATED TO ASME CODE SECTION VIII DIVISION 1 AND LATEST ADDENDA.
4. DRAWING IS NOT TO SCALE.
5. ALL DIMN'S ±1/8 (3) UNLESS OTHERWISE SHOWN.

DESIGN CONDITIONS

	SHELL		TUBES	
DESIGN PRESSURE	150 PSIG	1034 KPa	150 PSIG	1034 KPa
DESIGN TEMPERATURE	375 °F	191 °C	375 °F	191 °C
MIN. DESIGN METAL TEMP.	35 °F	1.7 °C	35 °F	1.7 °C
HYDRO. TEST PRESSURE	225 PSIG	1551 KPa	300 PSIG	2068 KPa
CONTENTS	STEAM		WATER	

CUSTOMER:
LOCATION:
ENGINEER:
ORDER No.:
PROJECT/JOB:
LOCATION:
TAG: (QUOTE #)

TITLE G.A. 150 LB. WS SERIES HEAT EXCHANGERS
DATE: 12 / 01 / 94 BY: D.C.R.

A R M S T R O N G
TORONTO - CANADA TEL : (416) 755-2291
MONTREAL - CANADA TEL : (514) 421-2424
BUFFALO - N. Y. TEL: (716) 693-8813
COLCHESTER - U.K. TEL: (44) 120-657-9491

NUMBER WS-6-4P-3-(3)
REV.

© S.A. Armstrong Limited 1999