ARMSTRONG®

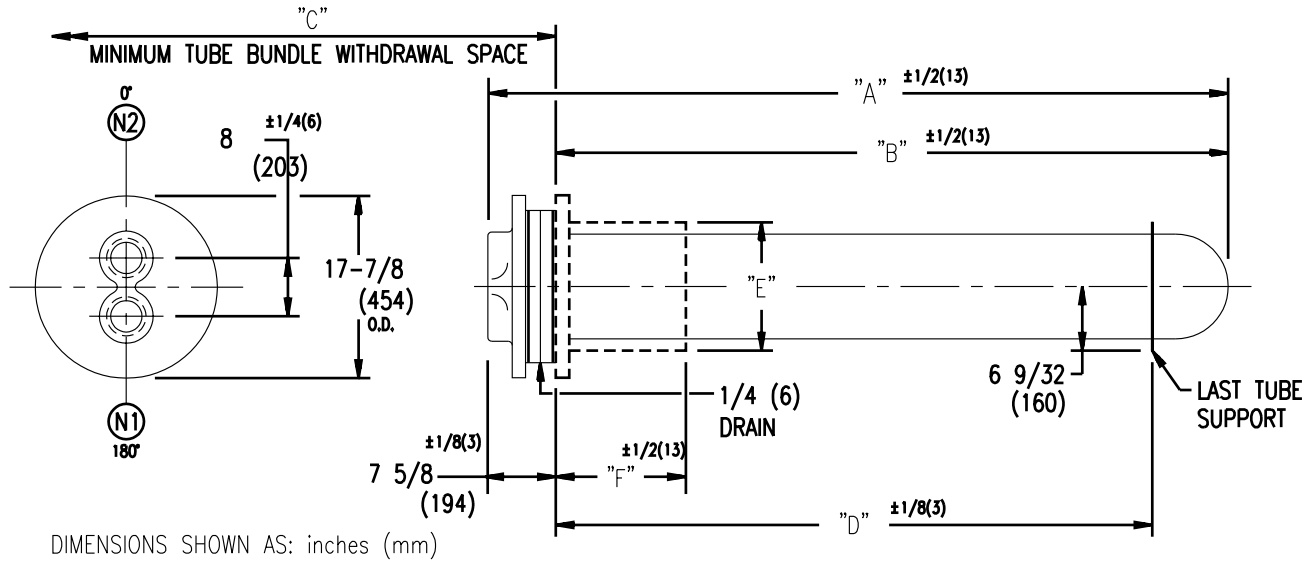

EXCHANGER SIZE	DIMENSIONS							
	"A"		"B"		"C"		"D"	
	inches	mm	inches	mm	inches	mm	inches	mm
THWX-1436-2-1	43-3/8	1102	35-3/4	908	38	965	24-1/2	622
THWX-1442-2-1	49-3/8	1254	41-3/4	1060	44	1118	30-1/2	775
THWX-1448-2-1	55-3/8	1407	47-3/4	1213	50	1270	36-1/2	927
THWX-1454-2-1	61-3/8	1559	53-3/4	1365	56	1422	42-1/2	1080
THWX-1460-2-1	67-3/8	1711	59-3/4	1518	62	1575	48-1/2	1232
THWX-1466-2-1	73-3/8	1864	65-3/4	1670	68	1727	54-1/2	1384
THWX-1472-2-1	79-3/8	2016	71-3/4	1822	74	1880	60-1/2	1537
THWX-1478-2-1	85-3/8	2169	77-3/4	1975	80	2032	66-1/2	1689
THWX-1484-2-1	91-3/8	2321	83-3/4	2127	86	2184	72-1/2	1842
THWX-1490-2-1	97-3/8	2473	89-3/4	2280	92	2337	78-1/2	1994
THWX-1496-2-1	103-3/8	2626	95-3/4	2432	98	2489	84-1/2	2146
THWX-14102-2-1	109-3/8	2778	101-3/4	2584	104	2642	90-1/2	2299
THWX-14108-2-1	115-3/8	2931	107-3/4	2737	110	2794	96-1/2	2451
THWX-14114-2-1	121-3/8	3083	113-3/4	2889	116	2946	102-1/2	2604
THWX-14120-2-1	127-3/8	3235	119-3/4	3042	122	3099	108-1/2	2756
THWX-14126-2-1	133-3/8	3388	125-3/4	3194	128	3251	114-1/2	2908
THWX-14132-2-1	139-3/8	3540	131-3/4	3346	134	3404	120-1/2	3061
THWX-14138-2-1	145-3/8	3693	137-3/4	3499	140	3556	126-1/2	3213
THWX-14144-2-1	151-3/8	3845	143-3/4	3651	146	3708	132-1/2	3366
THWX-14150-2-1	157-3/8	3997	149-3/4	3804	152	3861	138-1/2	3518
THWX-14156-2-1	163-3/8	4150	155-3/4	3956	158	4013	144-1/2	3670
THWX-14162-2-1	169-3/8	4302	161-3/4	4108	164	4166	150-1/2	3823

NOZZLE SCHEDULE		
N1 INLET	6" NPT	(152)
N2 OUTLET	6" NPT	(152)
N3 DRAIN		

COLLAR ASSEMBLY		
	STANDARD	OVS. (FOR STONE LINING)
"E"	14" (356)	16" (406)
"F"	10-1/2" (267)	12" (305)

DESIGN CONDITIONS		
	TUBES	
DESIGN PRESSURE	125 PSIG	862 KPa
DESIGN TEMPERATURE	375 °F	191 °C
M.D.M.T.	40 °F	4.4 °C
HYD. TEST PRESSURE	250 PSIG	1723 KPa

NOTES:
1. COLLAR ASSEMBLY SUPPLIED SEPARATELY.
2. FABRICATED TO ASME CODE SECTION VIII DIVISION 1 AND LATEST ADDENDA.
3. DRAWING IS NOT TO SCALE.
4. ALL DIMN'S ±1/8 (3) UNLESS OTHERWISE SHOWN.
5. DIMENSIONS SHOWN AS: in.(mm)

CUSTOMER:
LOCATION:

ENGINEER :
ORDER No.:
PROJECT/JOB:
LOCATION:

TAG:
APPROVAL #

TITLE G.A. 150 LB. TANK HEATERS	A R M S T R O N G	NUMBER	REV.
DATE :- 24/05/95 BY :- D.C.R	TORONTO - CANADA TEL : (416) 755-2291 · MONTREAL - CANADA TEL : (514) 421-2424 · BUFFALO - N. Y. TEL: (716) 693-8813 · COLCHESTER - U.K. TEL: (44) 120-657-9491	THWX-14-2P-1	

© S.A. Armstrong Limited 1999