ARMSTRONG®

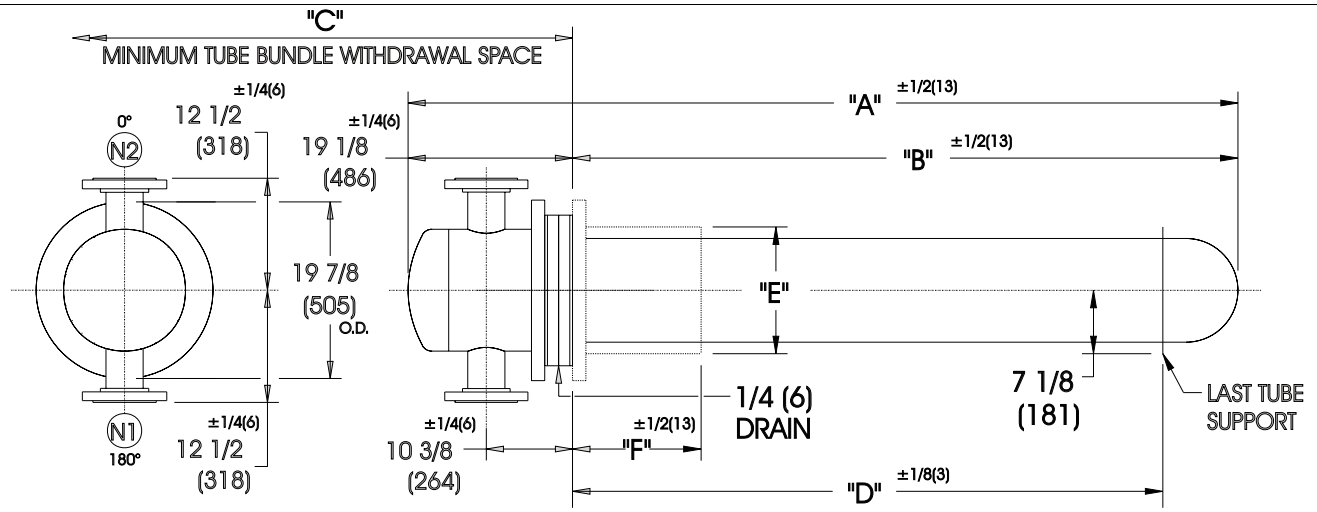

DIMENSIONS SHOWN AS: inches (mm)

EXCHANGER SIZE	DIMENSIONS							
	"A"		"B"		"C"		"D"	
	inches	mm	inches	mm	inches	mm	inches	mm
THWX-1636-2-4	54 -5/8	1387	35-1/2	902	38	965	24-1/2	622
THWX-1642-2-4	60 -5/8	1540	41-1/2	1054	44	1118	30-1/2	775
THWX-1648-2-4	66 -5/8	1692	47-1/2	1207	50	1270	36-1/2	927
THWX-1654-2-4	72 -5/8	1845	53-1/2	1359	56	1422	42-1/2	1080
THWX-1660-2-4	78 -5/8	1997	59-1/2	1511	62	1575	48-1/2	1232
THWX-1666-2-4	84 -5/8	2149	65-1/2	1664	68	1727	54-1/2	1384
THWX-1672-2-4	90 -5/8	2302	71-1/2	1816	74	1880	60-1/2	1537
THWX-1678-2-4	96 -5/8	2454	77-1/2	1969	80	2032	66-1/2	1689
THWX-1684-2-4	102 -5/8	2607	83-1/2	2121	86	2184	72-1/2	1842
THWX-1690-2-4	108 -5/8	2759	89-1/2	2273	92	2337	78-1/2	1994
THWX-1696-2-4	114 -5/8	2911	95-1/2	2426	98	2489	84-1/2	2146
THWX-16102-2-4	120 -5/8	3064	101-1/2	2578	104	2642	90-1/2	2299
THWX-16108-2-4	126 -5/8	3216	107-1/2	2731	110	2794	96-1/2	2451
THWX-16114-2-4	132 -5/8	3369	113-1/2	2883	116	2946	102-1/2	2604
THWX-16120-2-4	138 -5/8	3521	119-1/2	3035	122	3099	108-1/2	2756
THWX-16126-2-4	144 -5/8	3673	125-1/2	3188	128	3251	114-1/2	2908
THWX-16132-2-4	150 -5/8	3826	131-1/2	3340	134	3404	120-1/2	3061
THWX-16138-2-4	156 -5/8	3978	137-1/2	3493	140	3556	126-1/2	3213
THWX-16144-2-4	162 -5/8	4131	143-1/2	3645	146	3708	132-1/2	3366
THWX-16150-2-4	168 -5/8	4283	149-1/2	3797	152	3861	138-1/2	3518
THWX-16156-2-4	174 -5/8	4435	155-1/2	3950	158	4013	144-1/2	3670
THWX-16162-2-4	180 -5/8	4588	161-1/2	4102	164	4166	150-1/2	3823

NOZZLE SCHEDULE

N1	INLET	6" FLG	(152)
N2	OUTLET	6" FLG	(152)

COLLAR ASSEMBLY

	STANDARD	OVS. FOR STONE LINING
"E"	16 (406)	18 (457)
"F"	12 (305)	12 1/2 (318)

DESIGN CONDITIONS

	TUBES	
DESIGN PRESSURE	150 PSIG	1034 KPa
DESIGN TEMPERATURE	375 F	191 C
M.D.M.T.	40 F	4.4 C
HYD. TEST PRESSURE	225 PSIG	1551 KPa

NOTES:
1. COLLAR ASSEMBLY SUPPLIED SEPARATELY.
2. FABRICATED TO ASME CODE SECTION VIII DIVISION 1 AND LATEST ADDENDA.
3. DRAWING IS NOT TO SCALE.
4. ALL DIMN'S 1/8 (3) UNLESS OTHERWISE SHOWN.
5. DIMENSIONS SHOWN AS: in.(mm)

CUSTOMER:
LOCATION:

ENGINEER :
ORDER No.:
PROJECT/JOB:
LOCATION:

TAG:
QUOTE #

TITLE	ARMSTRONG	NUMBER	REV.
G.A. 150 LB. TANK HEATERS	TORONTO - CANADA TEL : (416) 755-2291 · MONTREAL - CANADA TEL : (514) 421-2424 · BUFFALO - N. Y. TEL: (716) 693-8813 · COLCHESTER - U.K. TEL: (44) 120-657-9491	Thwx-16-2P-4	
DATE : 24/05/95 BY : D.C.R			

© S.A. Armstrong Limited 1999