ARMSTRONG®

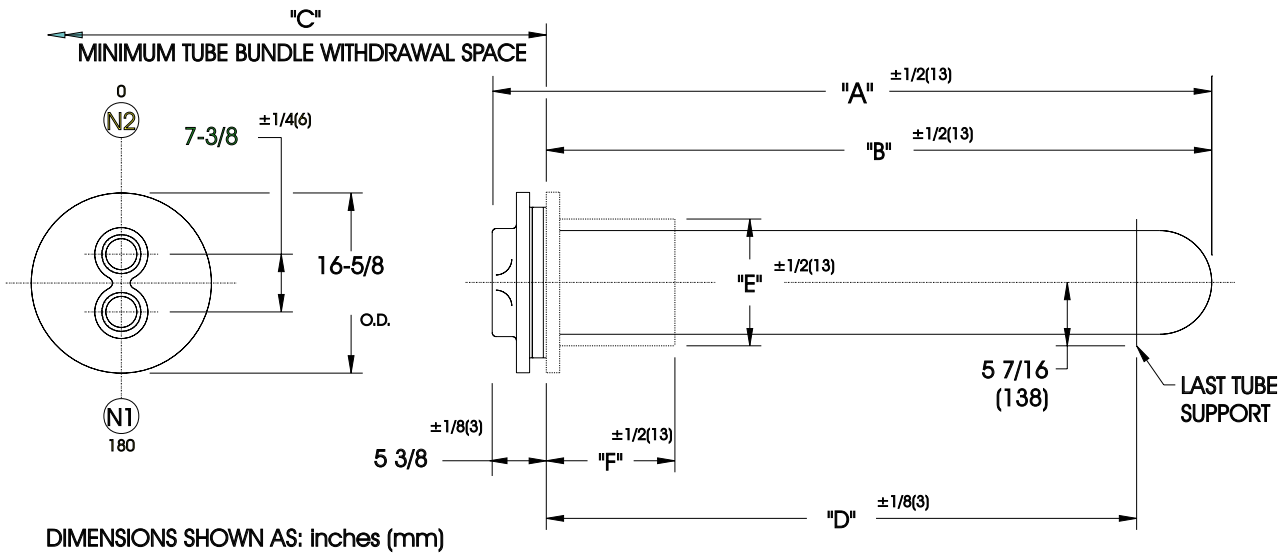

DIMENSIONS SHOWN AS: inches (mm)

EXCHANGER SIZE	DIMENSIONS							
	"A"		"B"		"C"		"D"	
	inches	mm	inches	mm	inches	mm	inches	mm
THW-1236-2-1	41-1/8	1045	35-3/4	908	38	965	24-5/16	618
THW-1242-2-1	47-1/8	1197	41-3/4	1060	44	1118	30-5/16	770
THW-1248-2-1	53-1/8	1349	47-3/4	1213	50	1270	36-5/16	922
THW-1254-2-1	59-1/8	1502	53-3/4	1365	56	1422	42-5/16	1075
THW-1260-2-1	65-1/8	1654	59-3/4	1518	62	1575	48-5/16	1227
THW-1266-2-1	71-1/8	1807	65-3/4	1670	68	1727	54-5/16	1380
THW-1272-2-1	77-1/8	1959	71-3/4	1822	74	1880	60-5/16	1532
THW-1278-2-1	83-1/8	2111	77-3/4	1975	80	2032	66-5/16	1684
THW-1284-2-1	89-1/8	2264	83-3/4	2127	86	2184	72-5/16	1837
THW-1290-2-1	95-1/8	2416	89-3/4	2280	92	2337	78-5/16	1989
THW-1296-2-1	101-1/8	2569	95-3/4	2432	98	2489	84-5/16	2142
THW-12102-2-1	107-1/8	2721	101-3/4	2584	104	2642	90-5/16	2294
THW-12108-2-1	113-1/8	2873	107-3/4	2737	110	2794	96-5/16	2446
THW-12114-2-1	119-1/8	3007	113-3/4	2889	116	2946	102-5/16	2599
THW-12120-2-1	125-1/8	3178	119-3/4	3042	122	3099	108-5/16	2751
THW-12126-2-1	131-1/8	3331	125-3/4	3194	128	3251	114-5/16	2904
THW-12132-2-1	137-1/8	3483	131-3/4	3346	134	3404	120-5/16	3056
THW-12138-2-1	143-1/8	3635	137-3/4	3499	140	3556	126-5/16	3208
THW-12144-2-1	149-1/8	3788	143-3/4	3651	146	3708	132-5/16	3361
THW-12150-2-1	155-1/8	3940	149-3/4	3804	152	3861	138-5/16	3513
THW-12156-2-1	161-1/8	4093	155-3/4	3956	158	4013	144-5/16	3666
THW-12162-2-1	167-1/8	4245	161-3/4	4108	164	4166	150-5/16	3818

NOZZLE SCHEDULE

N1	INLET	4" NPT	(102)
N2	OUTLET	4" NPT	(102)

COLLAR ASSEMBLY

	STANDARD	OVS. FOR STONE LINING
"E"	12-3/4" (324)	14" (356)
"F"	10" (254)	10-1/2" (267)

DESIGN CONDITIONS

	TUBES	
DESIGN PRESSURE	125 PSIG	862 KPa
DESIGN TEMPERATURE	375 F	191 C
M.D.M.T.	35 F	1.7 C
HYD. TEST PRESSURE	250 PSIG	1723 KPa

NOTES:
1. COLLAR ASSEMBLY SUPPLIED SEPARATELY.
2. FABRICATED TO ASME CODE SECTION VIII DIVISION 1 AND LATEST ADDENDA.
3. DRAWING IS NOT TO SCALE.
4. ALL DIMN'S 1/8 (3) UNLESS OTHERWISE SHOWN.
5. DIMENSIONS SHOWN AS: In.(mm)

CUSTOMER:
LOCATION:

ENGINEER :
ORDER No.:
PROJECT/JOB:
LOCATION:

TAG:
QUOTE #

TITLE G.A. 150 LB. TANK HEATERS	ARMSTRONG	NUMBER	REV.
DATE : 24/05/95 BY : D.C.R	TORONTO - CANADA TEL : (416) 755-2291 · MONTREAL - CANADA TEL : (514) 421-2424 · BUFFALO - N. Y. TEL: (716) 693-8813 · COLCHESTER - U.K. TEL: (44) 120-657-9491	Thw-12-2P-1	

© S.A. Armstrong Limited 1999